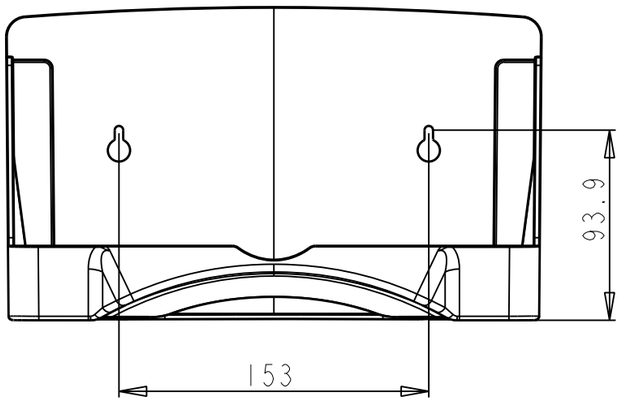

Drill pattern

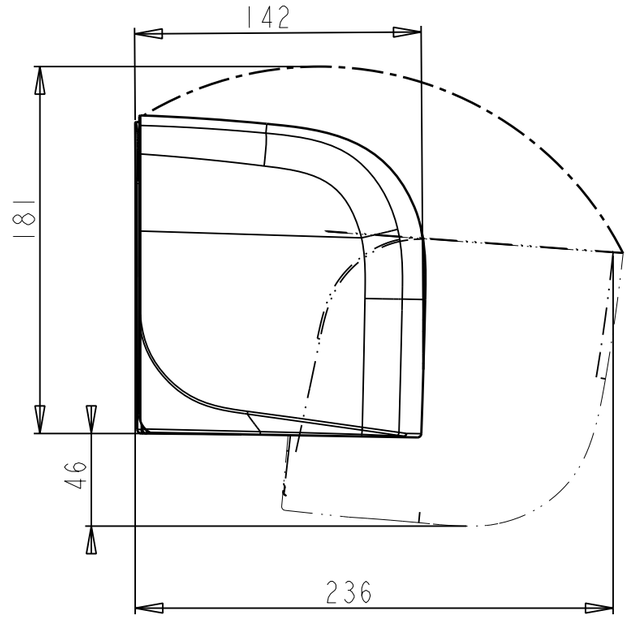

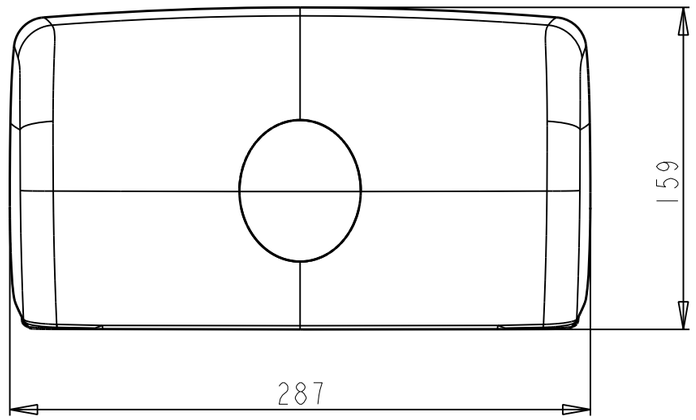

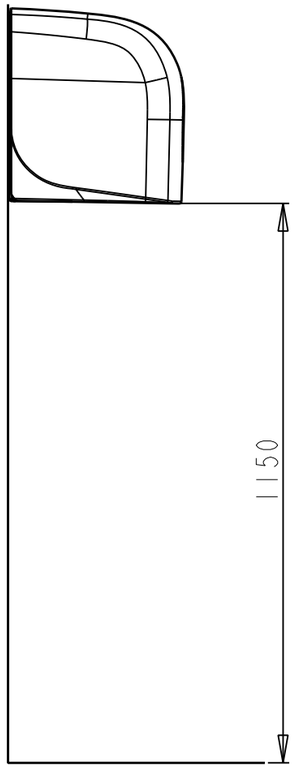

SCALE 1:5

Dimensions in mm